Driving speed **14km/h**

Maximum gradeability with load **10%**

Maximum lifting speed with load **0.4m/s**

Maximum lifting speed without load **0.6m/s**

Full vehicle advantage

High performance guarantee high efficiency

- Lifting speed is increased by 10% and thus more goods can be lifted under the same conditions;
- The truck has fast driving and lifting speed, higher working efficiency;
- ZAPI Dual CPU controller conforming to the latest EU standard is equipped;
- The latest ZAPI instrument can be equipped with height preset function.
- One key to reach the set height improves operation efficiency Small turning radius makes steering flexible and easy.

Intelligent security protection

- **Intelligent stabilization system :** it can automatically adjust the mast and the truck speed according to the lifting height and load state . Improve the high bearing capacity and vehicle stacking safety ;
- **Intelligent speed limit in different application :** multi-scenario identification and intelligent speed limit balance efficiency and safety ;
- **Intelligent limit buffering :** intelligent induction of mast lifting and lowering avoids extreme impact and is safe and comfortable ;
- **Intelligent operation protection :** a full set of OPS system can avoid misoperation and ensure safety ;
- **Intelligent control strategy :** dual core controller is in line with the latest EU safety requirements ;
- **Intelligent steering deceleration :** the automatic deceleration function of the turning can reduce the risk of turning over ;

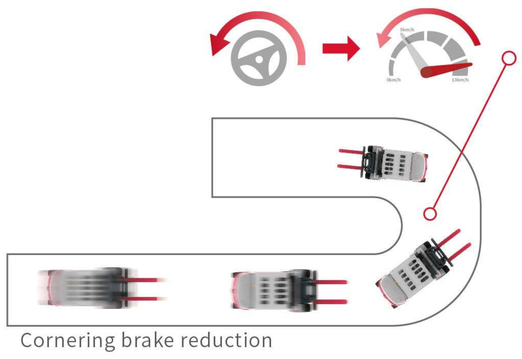

Cornering brake reduction

Advanced EPS electric powered steering

- EPS electric powered steering offering easy, flexible, high efficient and mute operation.
- Steering motor controller.
- Automatic centering function.
- Real-time shifting between 180°steering mode and 360° steering mode.
- Automatic limit on speed and accelerated speed when steering.

Newly designed hydraulic system

- Newly designed hydraulic system with high working efficiency
- High power lifting motor
- MOSFET lifting speed governing electric controller
- New type low noisy gear pump
- Max. lifting speed without load 15% increased
- Max. lifting speed with load 25% increased

Easy operated thumb switch

- To control hydraulic functions.
- Clear operating units.
- Proportional solenoid offering a stable and comfort lowering action.

Ergonomic optimization

- The new design of overhead guard provides a better view.
- Standard handrails make ingress and egress more convenient.
- Larger space for getting on and legs.

Environment Friendly

- Zero emission.
- Low noise.
- Free of heavy metals.
- No corrosion.
- No acid mist volatilization.

Maintenance Free

- Unnecessary of fluid adding and dust proofing.
- Daily maintenance free.
- Manual maintenance free.

High Efficiency and Energy Saving

- 2 hours charging meet 6-8 hours working demand.
- High-energy density, self discharging rate lower than 1% per month.
- 95% energy conversion rate,superior charging and discharging performance.
- Flexible to charge, easy to operate, no impact on battery life Unnecessary to change battery, cost saving.

High Safety

- According to the characteristics of industrial vehicles, it achieves safety protection design which includes lithium battery materials, battery core type, pack technique and system power management.
- "Multiple node safety closed circuit protection" realizing truck real time closed circuit protection in variable conditions.
- "Lock affirming" function during charging avoiding "hot connecting and disconnecting" operation effectively.

Long Service Life

- Longer service life than lead-acid battery in equal working condition.
- 5 years or ten thousand hours quality guarantee for high performance lithium battery assembly.

Suitable for working in both high and low environment

- Lithium battery is better than lead-acid battery when working between -25°C and 55°C.

Operating Cost Comparison:

Lithium battery forklift
VS.
Lead-acid battery forklift

Lithium battery forklift VS. Lead-acid battery forklift
The advantages of HELI lithium battery forklift trucks are more prominent in the cycle cost.
Lithium battery forklift truck has the advantages of no noise, no pollution, small vibration and simple operation
Compared with the lead-acid battery forklift truck, lithium battery forklift has the characteristics of fast charging and charging at any time, which is more suitable for multi shift operation.
Besides, HELI lithium battery forklift is maintenance free, high power conversion efficiency, and economical overall operation cost

G2 1.2-1.6 t LI ION

WIDE VIEW FULL FREE 3–STAGE MAST

Mast model	Max. lifting height (mm)	Load capacity (load center 600mm)(kg)			Mast overall height h1(mm)	Free lifting height (with backrest) h2(mm)	Service weight(kg)			Fork tilt angle (front/rear)α/β
		CQD12-GB2SLI	CQD14-GB2SLI	CQD16-GB2SZLI			CQD12-GB2SLI	CQD14-GB2SLI	CQD16-GB2SZLI	
ZSM460	4600	1200	1400	1600	2314	1280	2914	3298	3298	2°/4°
ZSM480	4800	1200	1400	1600	2381	1340	2929	3312	3312	2°/4°
ZSM540	5400	1200	1400	1600	2581	1540	2971	3355	3355	2°/4°
ZSM570	5700	1200	1400	1550	2681	1640	2993	3376	3376	2°/4°
ZSM630	6300	1200	1400	1500	2881	1840	3037	3420	3420	2°/4°
ZSM675	6750	1050	1400	1450	2982	1940	3061	3445	3445	2°/4°
ZSM700	7000	950	1400	1400	3065	2030	3130	3515	3515	2°/4°
ZSM715	7150	/	1350	1350	3115	2080	/	3525	3525	2°/4°
ZSM750	7500	/	1250	1250	3232	2190	/	3551	3551	2°/4°
ZSM800	8000	/	1150	1150	3398	2360	/	3587	3587	2°/4°
ZSM850	8500	/	/	1000	3564	2530	/	/	3621	2°/4°

Note:The free lift height is 4600mm-6300mm when the truck is not assembled with backrest. The free lift height is 175mm increased and other height is 25mm increased.

WIDE VIEW MAST

Mast model	Max. lifting height (mm)	Load capacity(load center 600mm)(kg)			Mast overall height h1(mm)	Service weight(kg)			Fork tilt angle (front/rear)α/β
		CQD12-GB2SLI	CQD14-GB2SLI	CQD16-GB2SZLI		CQD12-GB2SLI	CQD14-GB2SLI	CQD16-GB2SZLI	
M290	2900	1200	1400	1600	2200	2758	3043	3043	2°/4°
M320	3200	1200	1400	1600	2350	2780	3065	3065	2°/4°
M360	3600	1200	1400	1600	2550	2810	3095	3095	2°/4°
M380	3800	1200	1400	1600	2650	2824	3109	3109	2°/4°
M400	4000	1200	1400	1600	2750	2839	3124	3124	2°/4°
M420	4200	1200	1400	1600	2850	2854	3139	3139	2°/4°
M440	4400	1200	1400	1600	2950	2909	3194	3194	2°/4°
M460	4600	1200	1400	1600	3050	2924	3209	3209	2°/4°
M500	5000	1100	1300	1500	3250	2955	3240	3240	2°/4°

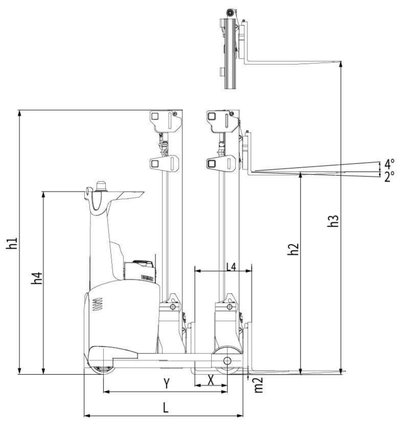

Ast: Right angle stacking aisle width
a: Clearance a=200mm

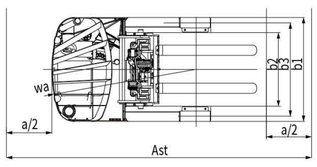

1.2 t 1.4 t 1.6 t

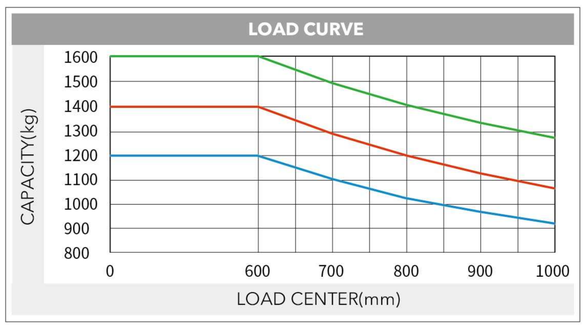

Note: The vertical axis stands for load capacity and the horizontal axis stands for load center which is calculated from the front surface of the forks to the gravity of the standard load. the standard load means a cubic with 1000mm edge length. When mast is tilted forward, using non-standard forks or loading large goods, the load capacity will be reduced. The load capacity of standard mast at different load center can be known from this load chart.

Manufacturer and technical parameters

	Character				
1.01	Manufacturer		HELI		
1.02	Model		CQD12	CQD14	CQD16
1.03	Configuration number		GB2SLi	GB2SLi	GB2SZLi
1.04	Load capacity	Q	1200	1400	1600
1.05	load center distance	C	600		
1.06	Power mode		Lithium Battery		
1.07	Driving mode		Seated		
1.08	Wheel base	Y	1385	1450	
	Tyre				
2.01	Tyre type		Polyurethane		
2.02	Number of wheels, driving wheel/bearing wheel (x=driving wheel)		1x/2		
2.03	Track width (bearing wheels)	b3	986	1012	
2.04	Size of bearing wheel		ϕ250x95	ϕ285x100	
2.05	Size of driving wheel		ϕ343x114	ϕ343x114	
	Size				
3.01	Lifting height of standard mast	h3	4600		
3.02	Free lift	h2	1280		
3.03	Mast height, lowered	h1	2314		
3.04	Fork size:thickness×width×length	s/e/l	40x122x1150		
3.05	Fork adjusting width		244~644		
3.06	Fork tilt angle (front/rear)		2°/4°		
3.07	Fork sideshifting		±55		
3.08	Truck body length (fork excluded)	L	1760	1847	
3.09	Truck body width	b1	1120		
3.10	Distance between support arms	b2	880	785	
3.11	Reach distance	l4	509	539	
3.12	Height of overhead guard (cab)	h4	2215		
3.13	Ground clearance, below mast	m2	75		
3.14	Turning radius	Wa	1625	1689	
3.15	Load distance, centre of support arm wheel to face of forks	x	313	330	
3.16	Aisle width with pallet 1200 x 1200 across forks	Ast	2891	2946	
3.17	Aisle width with pallet 1000 x 1200 across forks	Ast	2733	2788	
	Performance				
4.01	Travelling speed: with/without load		14/14		
4.02	Lifting speed: with/without load		0.45/0.7		
4.03	Lowering speed: with/without load		0.5/0.5		
4.04	Reach speed, with/without load		0.11/0.11		
4.05	Maximum climbing ability, with/without load		10/15		
	Weight				
5.01	Total weight (with battery)	kg	2914	3298	
5.02	Axle load,fork outreached,without load,front/rear	kg	1267/1647	1615/1683	1615/1683
5.03	Axle load,fork retracted,without load,front/rear	kg	1763/1151	2015/1283	2015/1283
5.04	Axle load,fork outreached,with load,front/rear	kg	601/3513	698/4200	670/4028
5.05	Axle load,fork retracted,with load,front/rear	kg	1526/2588	1798/3100	1726/2972
	Battery				
6.01	Battery voltage/capacity	V/Ah	80/150		
6.02	Battery weight	kg	590	710	
6.03	Battery box dimension	mm	1035x295x784	1035x352x784	
	Motor and controller				
7.01	Drive motor power (S2-60min)		7		
7.02	Lifting motor power (S3-15%)		12.5		
7.03	Steering motor power (S3-50%)		0.4		
7.04	Transmission box		HELI special transmission box		
7.05	Service brake		Electromagnetic brake		
7.06	Hydraulic system working pressure		17.5		

NOTE: *Detailed information about battery, please contact our salesmen or engineer.

HELI

Reliable special designed instrument

- The reliable special instrument gives a complete display of the vital information, like operation status, fault detection, etc. It ensures the operator predominate the vehicle status more intuitive and convenient.

Standard configuration

AC travelling motor
AC lifting motor
AC steering motor
ZAPI travelling motor controller
ZAPI lifting motor controller
ZAPI steering motor controller
Electromagnetic brake
DC/DC converter
Low noisy gear pump
Control valve (four throw)
Integral sideshifter
Standard fork
Backrest
Polyurethane tyre
LED meter
Front working light
Warning light
Safety belt
Rearview mirror with wide view angle
Blue warning light
USB
Handrail

Optional device

Three-stage full free lift mast
Fork with other length
Fork extension
Lifting height pre-selector
Monitoring system
Battery charger
Customer made color
Battery side pulling
HELI smart fleet management system
Multi-function handle

HELI smart fleet management system (optional)

- Vehicle positioning
- Remote diagnosis
- Remote monitoring
- Maintenance reminder
- Battery management
- Statistical form
- Vehicle management
- Identification recognition (optional)
- Weight management (optional)
- Collision management (optional)

Charger technology

High Efficiency
Charging efficiency higher than 95% meeting the requirements of energy saving and emissions reduction.

Speediness
100% charging realized in 2 hours at the soonest.

Compatibility
48V/80V compatibility meeting the demand of different voltage levels.

Safety
Built-in mis-connecting protection offering self isolating function under fault;Perfect fault self checking alarm facilitating users maintenance.

ANHUI HELI CO., LTD.
Add / No.668, FangXing Road, Hefei, China
Fax / +86-551-63639966
Tel / +86-551-63639068(America); 63639258(Europe); 63639358(Asia);
63662105(Africa & Middle East); 63639530(Overseas Marketing)

Linked in YouTube Facebook

* Our products are subject to improvements and changes without notice.

Design&Print:Fokeli Printing 20230306

www.heliforklift.net

HELI

1.2-1.6 t

G2 series Lithium Battery Powered Reach Truck (Sit-Down Type)(80V)

LI ION